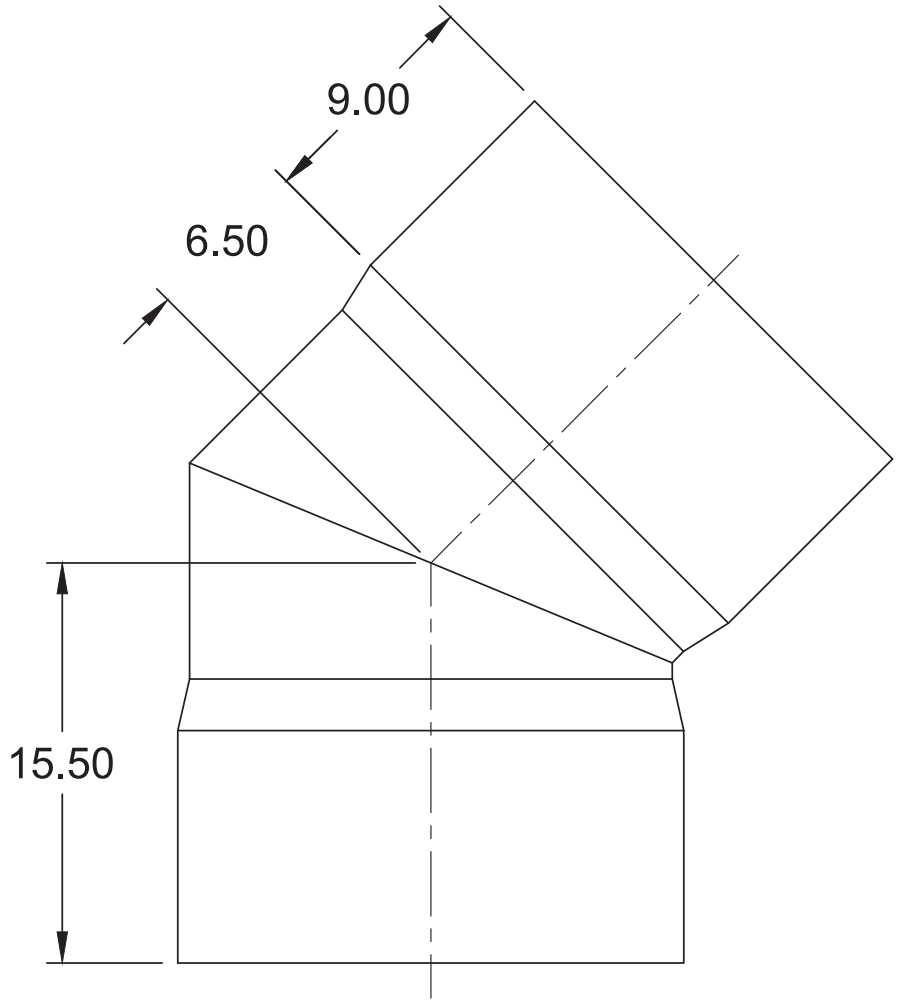

GPK PRODUCTS, INC.

FOR REFERENCE ONLY DIMENSIONS SUBJECT TO CHANGE

TITLE

18" x 45 DEGREE EL HxH
F679/F1336 PS 46 PSM PVC

1-800-437-4670 FARGO, ND

DATE	SCALE	PART NO.
8-19-09	NONE	221-0018